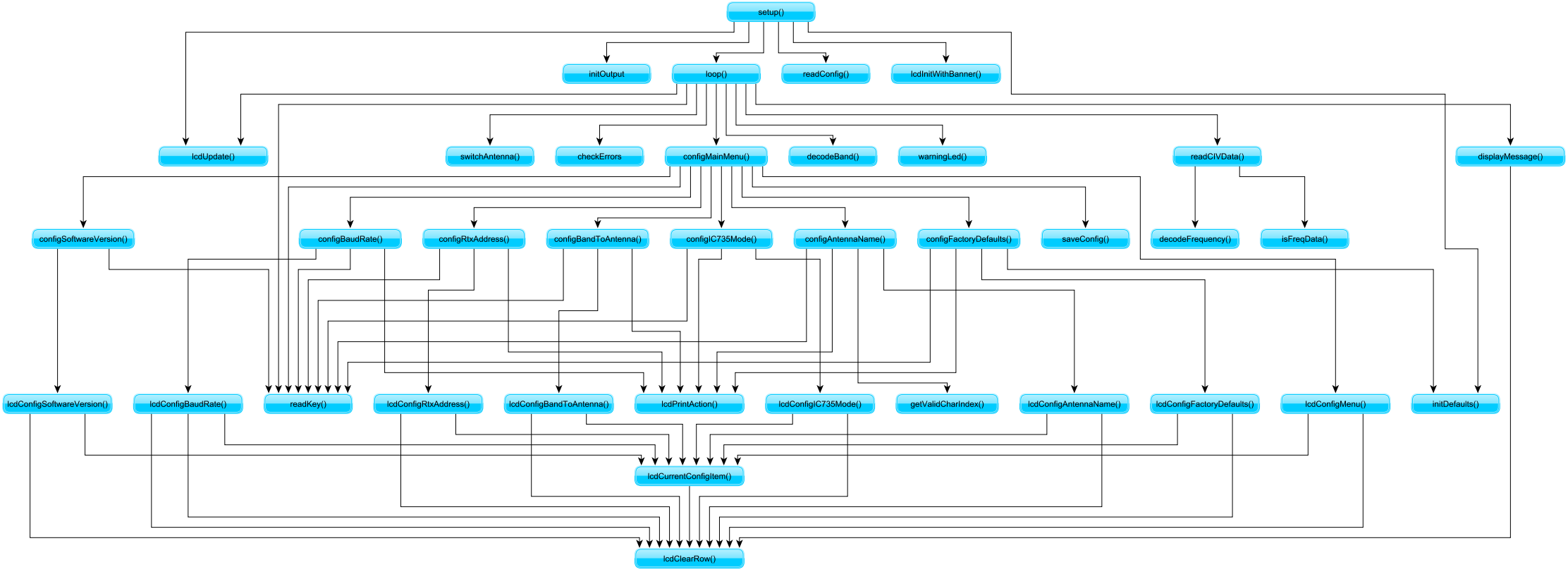
setup()
initOutput
loop()
readConfig()
lcdInitWithBanner()
lcdUpdate()
switchAntenna()
checkErrors
configMainMenu()
decodeBand()
warningLed()
readCIVData()
displayMessage()
configSoftwareVersion()
configBaudRate()
configRtxAddress()
configBandToAntenna()
configIC735Mode()
configAntennaName()
configFactoryDefaults()
saveConfig()
decodeFrequency()
isFreqData()
lcdConfigSoftwareVersion()
lcdConfigBaudRate()
readKey()
lcdConfigRtxAddress()
lcdConfigBandToAntenna()
lcdPrintAction()
lcdConfigIC735Mode()
getValidCharIndex()
lcdConfigAntennaName()
lcdConfigFactoryDefaults()
lcdConfigMenu()
initDefaults()
lcdCurrentConfigItem()
lcdClearRow()